Current part is item (31) on diagram. Available at www.oshkoshequipment.com

(1) SMR Code	(2) Federal Stock Number	(3) DESCRIPTION Reference Number & Mfr. Co	Usable On Code	(4) UNIT of meas	(5) Qty inc. in Unit	(6) 30-day OS maint allowance (a) 1-20	(b) 21-50	(c) 51-100	(7) 30-day AM maint allowance (a) 1-20	(b) 21-50	(c) 51-100	(8) alw per 100 equip cnt-gcy	(9) maint alw per 100 equip	(10) (a) Figure No.	(b) Item No.
		1601-SPRINGS-CONTINUED													
X2-O		BOLT:SPRING LEAF ASSEMBLY 10883157 (19207)	A	EA	2	*	*	*	*	*	*	*	*	123	18
P-O	2510-177-78	CLIP:SPRING LEAF INNER 10883160 (19207)	A	EA	2	*	*	*	*	*	*	*	*	123	19
P-O	5305-069-55	SCREW,CAP,HEXAGON: MS90725-99 (96906)	A	EA	12	*	*	*	*	*	*	*	*	123	20
P-O	2510-700-18	SPACER:SPRING LEAF 7001851 (19207)	A	EA	12	*	*	*	*	*	*	*	*	123	21
X2-O		CLIP: SPRING LEAF CENTER 10883161 (19207)	A	EA	2	*	*	*	*	*	*	*	*	123	22
X1		RIVET:SPRING LEAF CLIP 104127 (21450)			12									123	23
P-O	2510-177-79	CLIP:SPRING LEAF CENTER 10883159 (19207)	A	EA	2	*	*	*	*	*	*	*	*	123	24
P-O	5310-891-17	NUT,SELF-LOCKING: MS5691-25 (96906)	A	EA	12	*	*	*	*	*	*	*	*	123	25
P-O	3120-770-29	BUSHING:SPRING MOUNTING 7702941 (19207)	A	EA	4	*	*	*	*	*	*	*	*	123	26
P-O	2510-740-93	SPRING,LEAF:NO.2 7409339 (19207)	A(EXCEPT LA,BE IA,MA	EA	2	*	*	*	*	*	*	*	*	123	27
P-O	2510-741-11	SPRING,LEAF:NO.2 7411112 (19207)	BE,IA	EA	2	*	*	*	*	*	*	*	*	123	27
P-O	2510-740-93	SPRING,LEAF:NO.1 7409338 (19207)	A(EXCEPT IA,BE LA,MA	EA	2	*	*	*	*	*	*	*	*	123	28
P-O	2510-741-11	SPRING,LEAF:NO.1 7411111 (19207)	BE,IA LA,MA	EA	2	*	*	*	*	*	*	*	*	123	28
P-O	5310-732-05	NUT: MS51968-14 (96906)	A	EA	2	*	*	*	*	*	*	*	*	123	29
P-O	2510-740-93	HANGER:FRONT SPRING 7409337 (19207)	A	EA	4	*	*	*	*	*	*	*	*	123	30
P-O	2540-740-93	SEAT: 7409343 (19207)	A	EA	2	*	*	*	*	*	*	*	*	123	31
P-O	5305-716-81	SCREW,CAP,HEXAGON: MS90726-117 (96906)	A	EA	2	*	*	*	*	*	*	*	*	123	32
P-O	5306-740-93	BOLT,U:SPRING SADDLE 7409347 (19207)	A(EXCEPT HA,JA BD,BE,IA,LA,HA	EA	4	*	*	*	*	*	*	*	*	124	1

Current part is item (31) on diagram. Available at www.oshkoshequipment.com

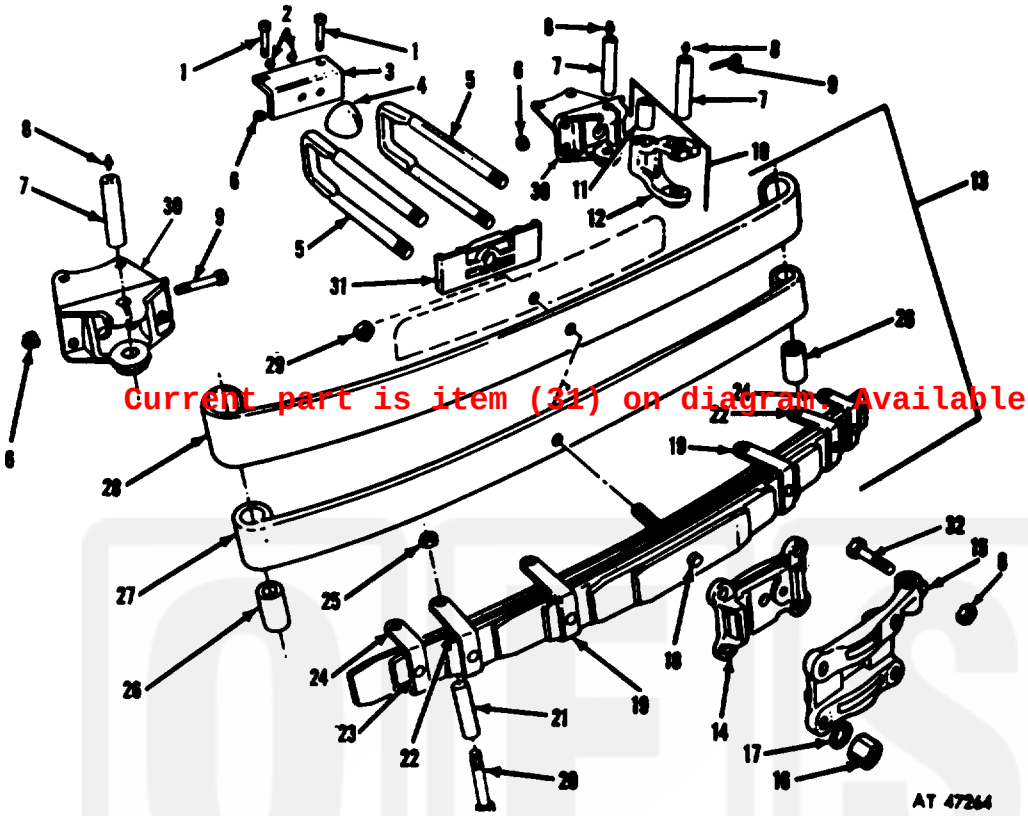

Current part is item (31) on diagram. Available at www.oshkoshequip

Figure 123. Front spring assembly and related parts.

Current part is item (31) on diagram. Available at www.oshkoshequip